SUBMITTAL

KEFLEX HVAC Products

GOLD SERIES -STAINLESS STEEL BRAIDED HOSE ASSEMBLY GROOVE X REDUCING FLANGE

PROJECT:	
CUSTOMER:	
ENGINEER:	
ARCHITECT:	

MATERIALS OF CONSTRUCTION	
HOSE:	T-321 SS
BRAID:	T-304 SS
END FITTINGS:	CARBON STEEL

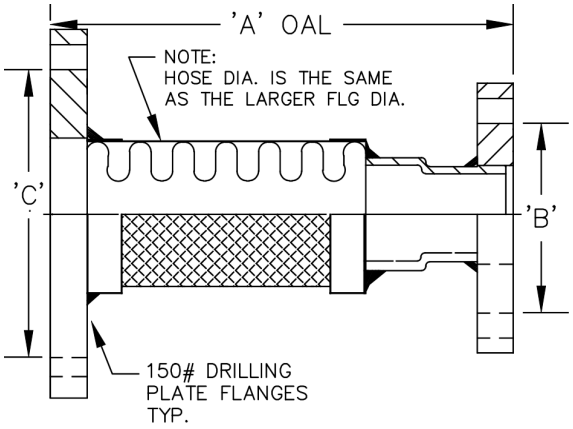

MAXIMUM LATERAL DEFLECTION = 1/8"

QTY	ID # OR TAG #	HOSE DIAMETER (IN)	KEFLEX PART #	PRESSURE @ 70°F	'C' FLG DIA.	'B' FLG DIA.	'A' OAL	3D Model (.stp)
		2"	F020KFCS014RF	510	2"	1 1/2"	13"	3D
		2 1/2"	F024KFCS014RF	380	2 1/2"	1 1/2"	13"	3D
		2 1/2"	F024KFCS020RF	380	2 1/2"	2"	13"	3D
		3"	F030KFCS020RF	310	3"	2"	13"	3D
		3"	F030KFCS024RF	310	3"	2 1/2"	13"	3D
		4"	F040KFCS020RF	230	4"	2"	13"	3D
		4"	F040KFCS024RF	230	4"	2 1/2"	13"	3D
		4"	F040KFCS030RF	230	4"	3"	13"	3D
		5"	F050KFCS024RF	190	5"	2 1/2"	16"	3D
		5"	F050KFCS030RF	190	5"	3"	16"	3D
		5"	F050KFCS040RF	190	5"	4"	16"	3D

FOR T-304 SS BRAID ABOVE 70°F	
TEMP °F	FACTOR
70	1.00
200	0.91
300	0.85
400	0.78
500	0.77
600	0.76

NOTE: FOR SAFE WORKING PRESSURE MULTIPLY PRESSURE RATING AT 70°F BY THE APPLICABLE CORRECTION FACTOR

IMPORTANT LINKS	
BROCHURE:	PDF
INSTALLATION INSTRUCTIONS:	PDF
WEBSITE:	KELCOIND.COM

MADE IN THE USA

1425 LAKE AVE
WOODSTOCK, IL 60098
Ph: 815-334-3600

KEFLEX

HVAC Products

SUBMITTAL

GOLD SERIES -STAINLESS STEEL BRAIDED HOSE ASSEMBLY GROOVE X REDUCING FLANGE

PROJECT:	
CUSTOMER:	
ENGINEER:	
ARCHITECT:	

MATERIALS OF CONSTRUCTION	
HOSE:	T-321 SS
BRAID:	T-304 SS
END FITTINGS:	CARBON STEEL

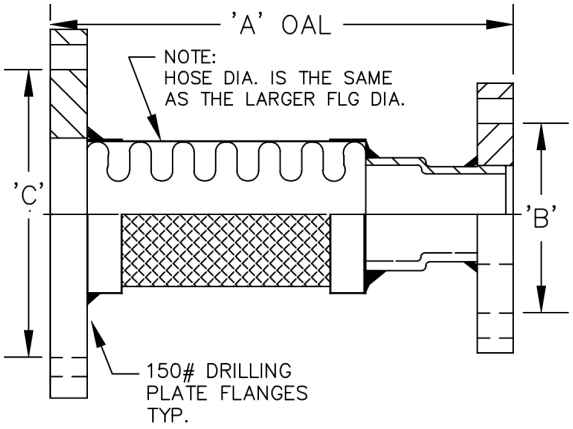

MAXIMUM LATERAL DEFLECTION = 1/8"

QTY	ID # OR TAG #	HOSE DIAMETER (IN)	KEFLEX PART #	PRESSURE @ 70°F	'C' FLG DIA.	'B' FLG DIA.	'A' OAL	3D Model (.stp)
		6"	F060KFCS030RF	165	6"	3"	17"	3D
		6"	F060KFCS040RF	165	6"	4"	17"	3D
		6"	F060KFCS050RF	165	6"	5"	17"	3D
		8"	F080KFCS040RF	230	8"	4"	18"	3D
		8"	F080KFCS050RF	230	8"	5"	18"	3D
		8"	F080KFCS060RF	230	8"	6"	18"	3D
		10"	F100KFCS060RF	230	10"	6"	18"	3D
		10"	F100KFCS080RF	230	10"	8"	18"	3D
		12"	F120KFCS080RF	160	12"	8"	20"	3D
		12"	F120KFCS100RF	160	12"	10"	20"	3D

FOR T-304 SS BRAID ABOVE 70°F	
TEMP °F	FACTOR
70	1.00
200	0.91
300	0.85
400	0.78
500	0.77
600	0.76

NOTE: FOR SAFE WORKING PRESSURE MULTIPLY PRESSURE RATING AT 70°F BY THE APPLICABLE CORRECTION FACTOR

IMPORTANT LINKS	
BROCHURE:	PDF
INSTALLATION INSTRUCTIONS:	PDF
WEBSITE:	FLEX-WELD.COM

MADE IN THE USA

1425 LAKE AVE
WOODSTOCK, IL 60098
800-323-6893