KEFLEX

HVAC Products

SUBMITTAL

Mar 2018

"U" LOOP - STAINLESS STEEL BRAIDED HOSE ASSEMBLY W/150# FLANGE ENDS

PROJECT:	
CUSTOMER:	
ENGINEER:	
ARCHITECT:	

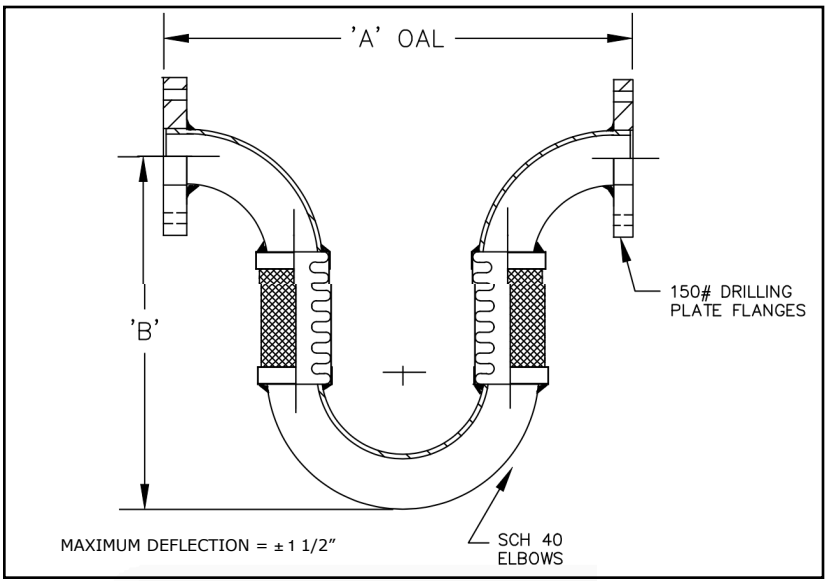

MATERIALS OF CONSTRUCTION	
HOSE:	T-321 SS
BRAID:	T-304 SS
END FITTINGS, ELBOW(S) & PIPE:	CARBON STEEL

QTY	ID # OR TAG #	HOSE DIAMETER (IN)	KEFLEX PART #	PRESSURE @ 70°F	'A' OAL	'B' REF	3D Model (.stp)
		2"	F020KFCSUFLG14	510	12 1/2"	22"	3D
		2 1/2"	F024KFCSUFLG14	380	15 1/2"	26"	3D
		3"	F030KFCSUFLG14	310	18 1/2"	28"	3D
		4"	F040KFCSUFLG14	230	24 1/2"	32"	3D
		5"	F050KFCSUFLG14	190	30 1/2"	38"	3D
		6"	F060KFCSUFLG14	165	36 1/2"	42"	3D
		8"	F080KFCSUFLG14	230	48 1/2"	54"	3D
		10"	F100KFCSUFLG14	230	60 1/2"	62"	3D
		12"	F120KFCSUFLG14	160	72 1/2"	70"	3D

FOR T-304 SS BRAID ABOVE 70°F	
TEMP °F	FACTOR
70	1.00
200	0.91
300	0.85
400	0.78
500	0.77
600	0.76

CLASSIFIED C UL US WATER QUALITY

PROCESS MEDIA
NSF/ANSI/CAN 61-2022
NSF/ANSI/CAN 372-2022
MH65354

NOTE: FOR SAFE WORKING PRESSURE MULTIPLY PRESSURE RATING AT 70°F BY THE APPLICABLE CORRECTION FACTOR

IMPORTANT LINKS	
BROCHURE:	PDF
INSTALLATION INSTRUCTIONS:	PDF
WEBSITE:	KELCOIND.COM

MADE IN THE USA

1425 LAKE AVE
WOODSTOCK, IL 60098
Ph: 815-334-3600